(1) ALIGN EDGE OF PAGE (1)

L08E3102

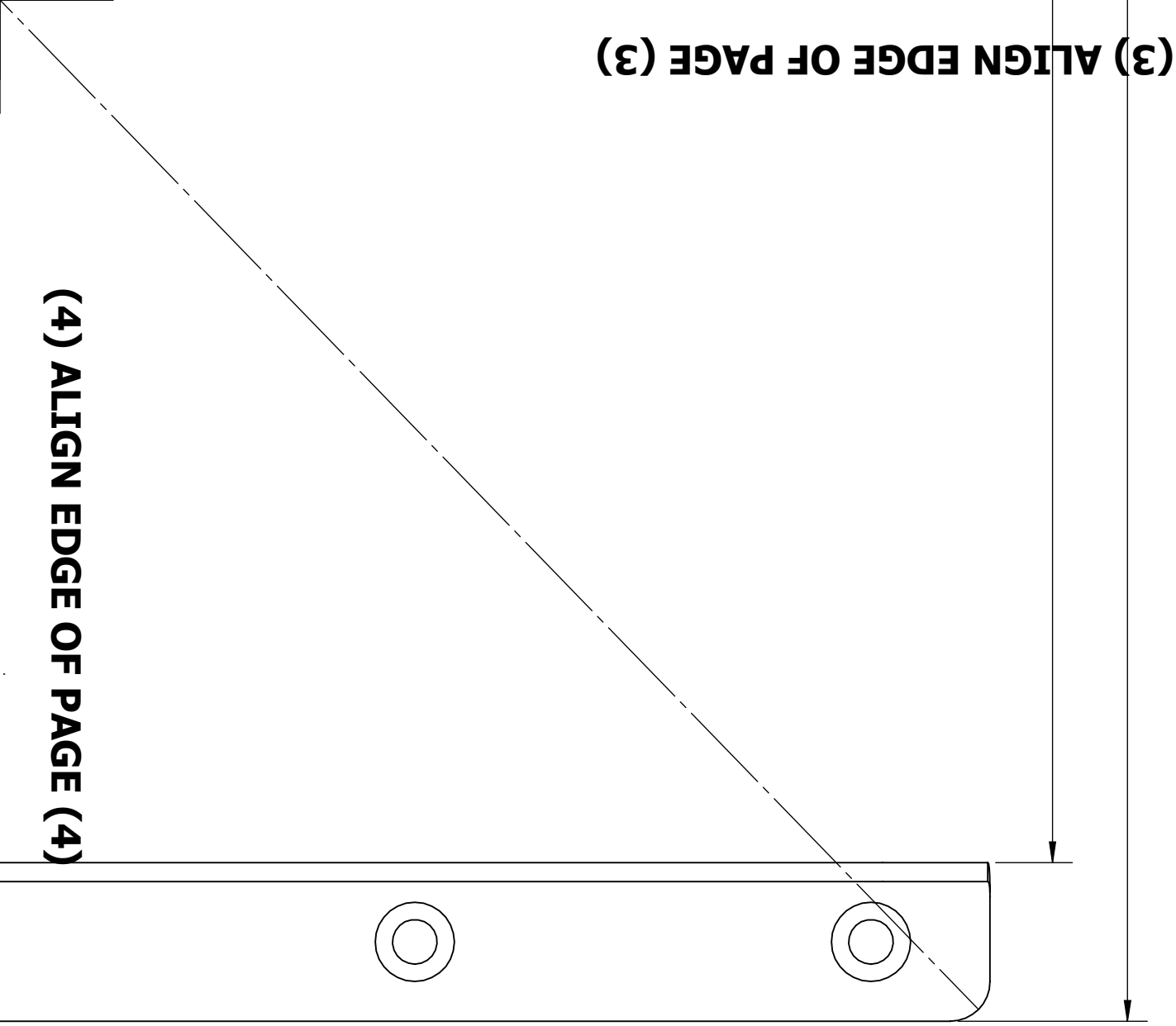

8" REFERENCE LINE FOR RULER

8.00

L08E3102

Schmitt&Sons

L08E3102
MOUNTING BRACKET TEMPLATE
PRINT AT 100% SCALE

ALIGN PAGES ESGE TO
EDGE BY MATCHING
NUMBERED EDGES

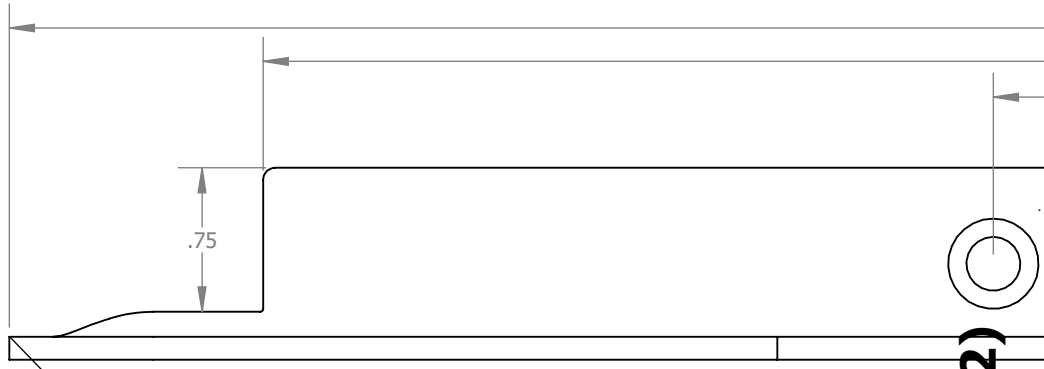

(2) ALIGN EDGE OF PAGE (2)

(1) ALIGN EDGE OF PAGE (1)

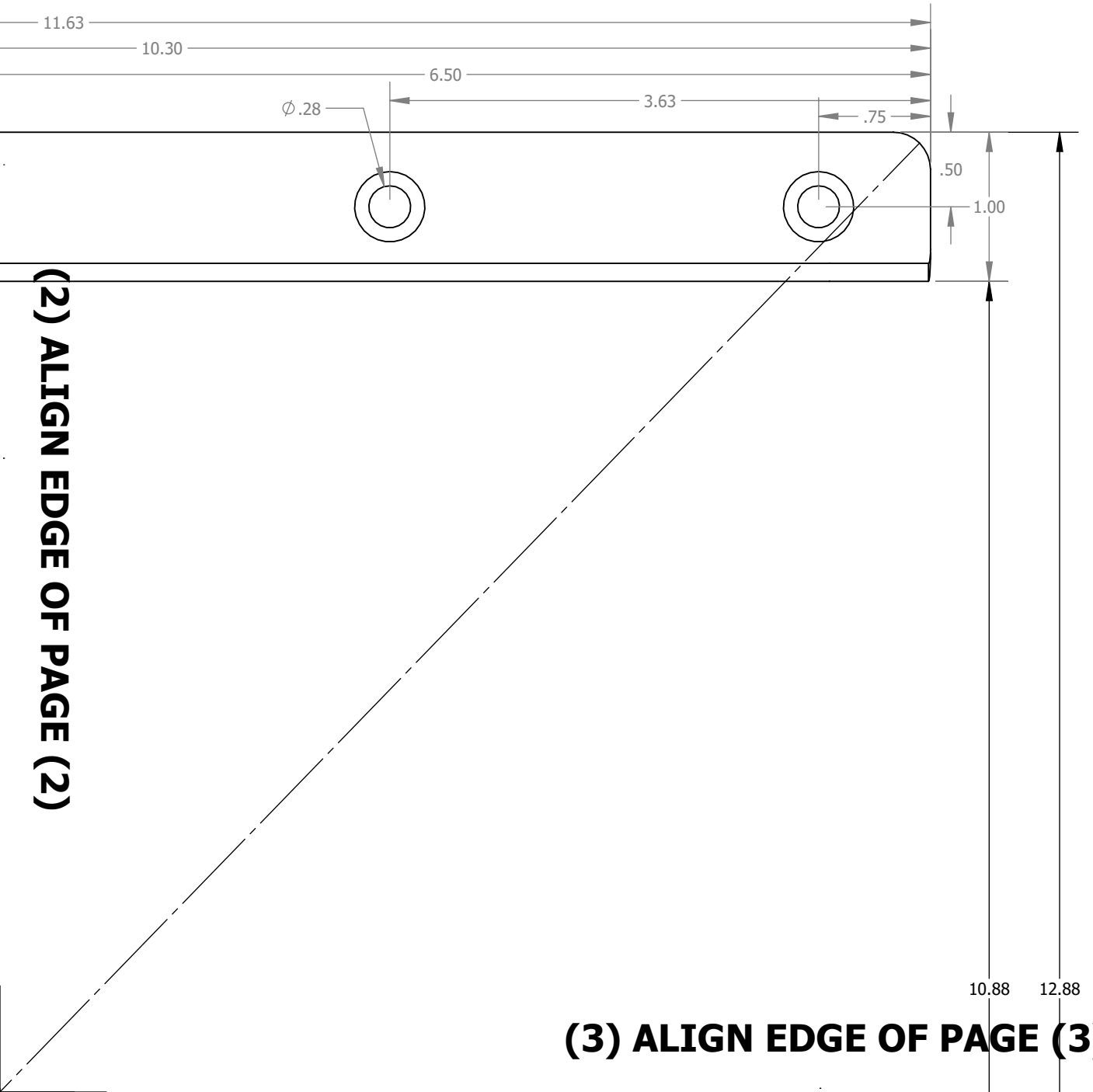

(2) ALIGN EDGE OF PAGE (2)

(3) ALIGN EDGE OF PAGE (3)

L08E3102